MODELLO: **BR / ZN**

PLEION
Il n.1 del Solare Termico in Italia!

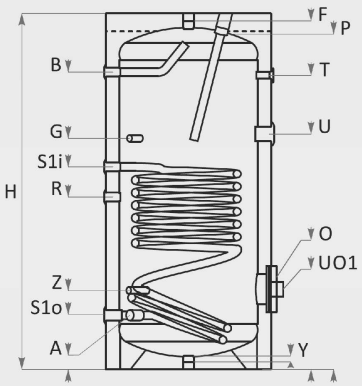

150-300

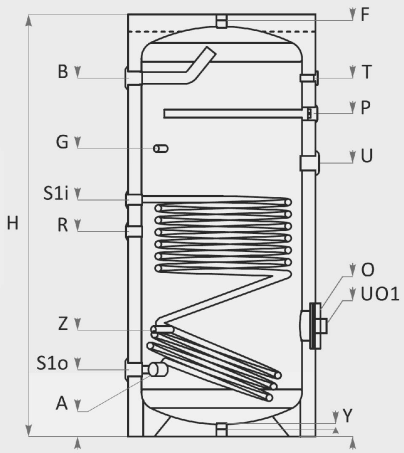

400-500

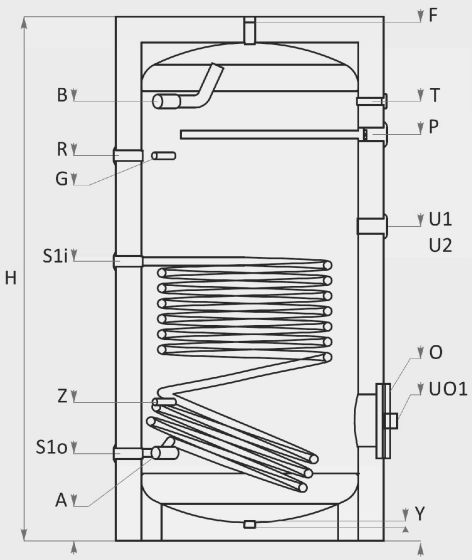

750-1000

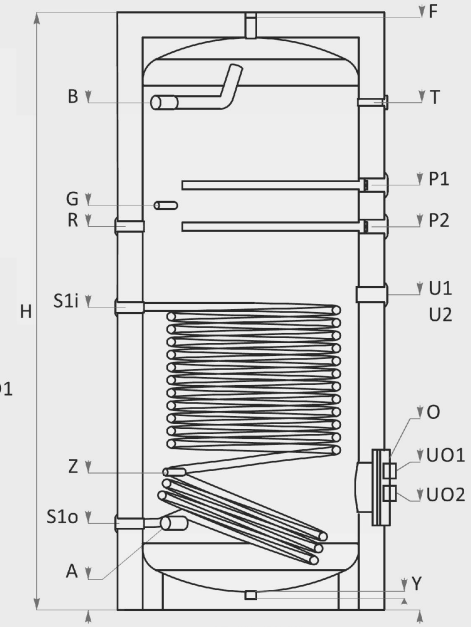

1500-2000

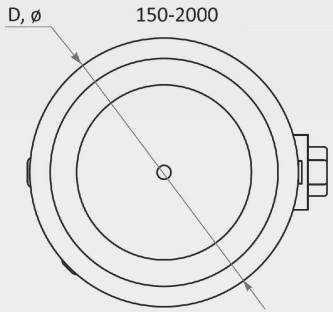

General parameters

L	H mm	D mm ø	kg
150	1070	ø560	59
200	1340	ø560	73
300	1420	ø660	104
400	1470	ø750	145
500	1720	ø750	167
750	2000	ø950	242
1000	2050	ø1050	286
1500	2310	ø1050	392
2000	2310	ø1350	712

General parameters

L Capacity
H, mm Height
C, mm Length
øD, mm Diameter
kg Weight

Heat-exchanger coil

S1 Lower coil
S1, m² Heat exchange surface S1
S1, L Coil capacity S1
S1, kW (m^3/h) Prolonged power acc. to DIN 4708; 80°C/60°C/45°C, S1
S1, NL 60°C NL- power coefficient at 60°C, S1
S1, Δp, mbar Pressure drop Δp, S1
S1i/S1o mm Inlet/Outlet Lower coil S1

Inlets / Outlets

A, mm Cold water inlet
B, mm Hot water outlet
G, mm Sensor sleeve for thermostat
F, mm Air vent sleeve
O, mm Inspection opening / flange
P, mm Anode
R, mm Recirculation
T, mm Thermometer
U, mm Sleeve for Electric element on water tank body
Uo, mm Sleeve for Electric element on inspection opening flange
Y, mm Drain sleeve
Z, mm Additional sensor sleeve

Heat-exchanger coil

L	S1 m²	S1 L	S1 kW (m^3/h)	S1 NL 60°C	S1 Δp, mbar	S1i/S1o mm Rp1"
150	0.74	4.56	25 (0.61)	2.5	65	592/202
200	0.9	5.55	29 (0.71)	4.5	75	692/202
300	1.2	7.40	53 (1.30)	11	120	805/215
400	1.5	9.25	62 (1.52)	13	180	850/270
500	1.8	11.10	72 (1.77)	18	210	960/270
750	2.1	12.95	80 (1.97)	32	210	970/300
1000	2.7	16.65	105 (2.58)	42	260	1080/320
1500	3	18.50	131 (3.22)	64	310	1180/320
2000	4.1	25.28	180 (4.42)	80	420	1635/385

Inlets / Outlets

A mm	B mm	G mm Rp½"	F mm Rp1"	O mm	P mm Rp1¼"	R mm	T mm Rp½"	U /Uo mm Rp1½"	Y mm Rp1"	Z mm Rp½"
Rp1"/202	Rp1"/868	822	1070	ø110x180/309	1070	Rp¾"/450	868	780/309	20	422
Rp1"/202	Rp1"/1340	892	1340	ø110x180/309	1340	Rp¾"/500	1138	850/309	20	392
Rp1"/215	Rp1"/1165	1897	1410	ø110x180/320	1410	Rp¾"/663	1170	950/320	20	407
Rp1¼"/270	Rp1¼"/1204	950	1480	ø110x180/450	1079	Rp1"/673	1204	900/450	20	450
Rp1½"/270	Rp1½"/1453	1168	1710	ø110x180/450	1340	Rp1"/831	1453	1130/450	20	568
Rp1½"/300	Rp1½"/1630	1435	1950	ø200x280/450	1435	Rp1"/1405	1630	1040/450	20	535
Rp1½"/320	Rp1½"/1700	1487	2020	ø200x280/460	1570	Rp1"/1497	1700	2x1155/460	40	520
2xRp1½"/320	2xRp1½"/1975	1487	2320	ø200x280/460	2x2090	Rp1"/1497	1975	2x1210/3x460	40	520
2xRp1½"/385	2xRp1½"/1885	1685	2311	ø400x560/484	2x2003	Rp1"/1635	1835	2x1340/3x484	30	745